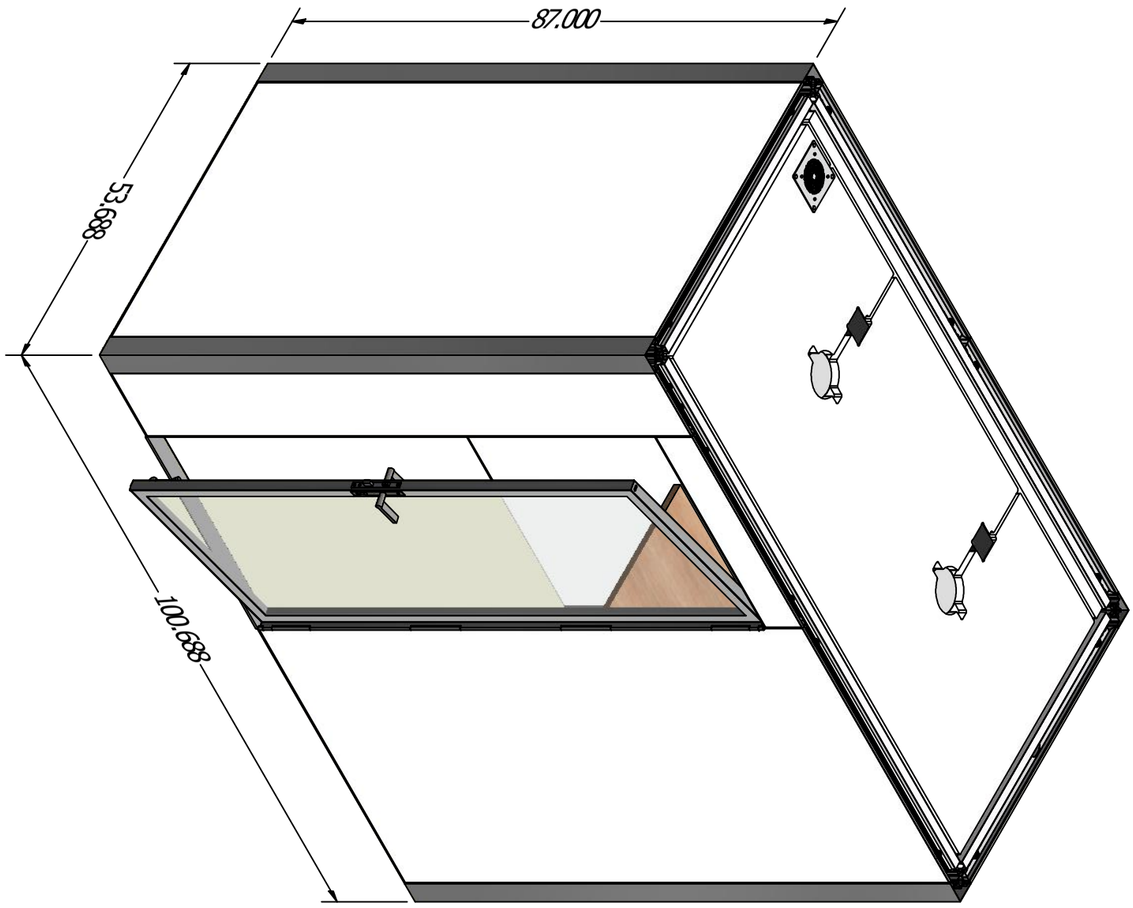

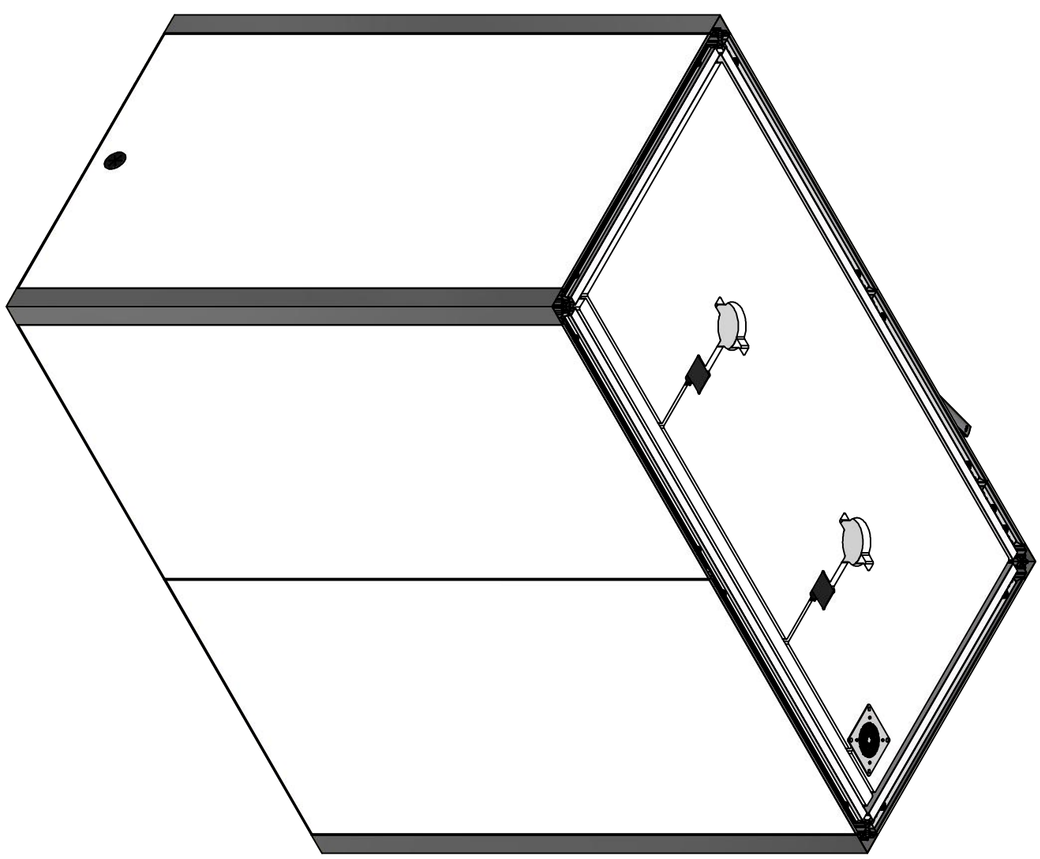

Highmark TechSystems
8343 Clinton Park Drive
Fort Wayne, IN 46825
Phone:260-483-0012

Sheet:	1 of 4
Current Rev:	
Drawn Date:	9/15/2020
Drawn By:	J Christman
Item Number:	WFH_S4_8.0x4.0_LD
Description:	WFH - 8.0x4.0 - Left Door
Client Name:	HM
Job Number:	25151
Cost Center:	Purchase

© 2020 All Rights Reserved

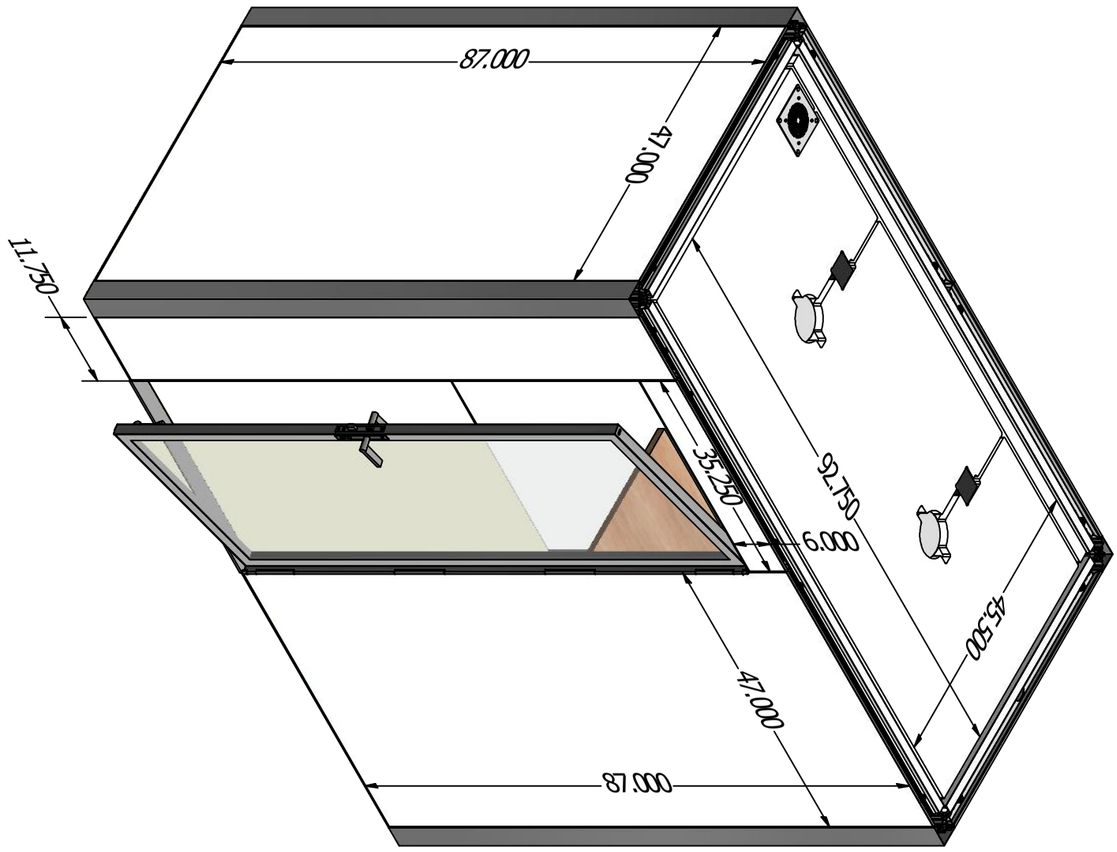

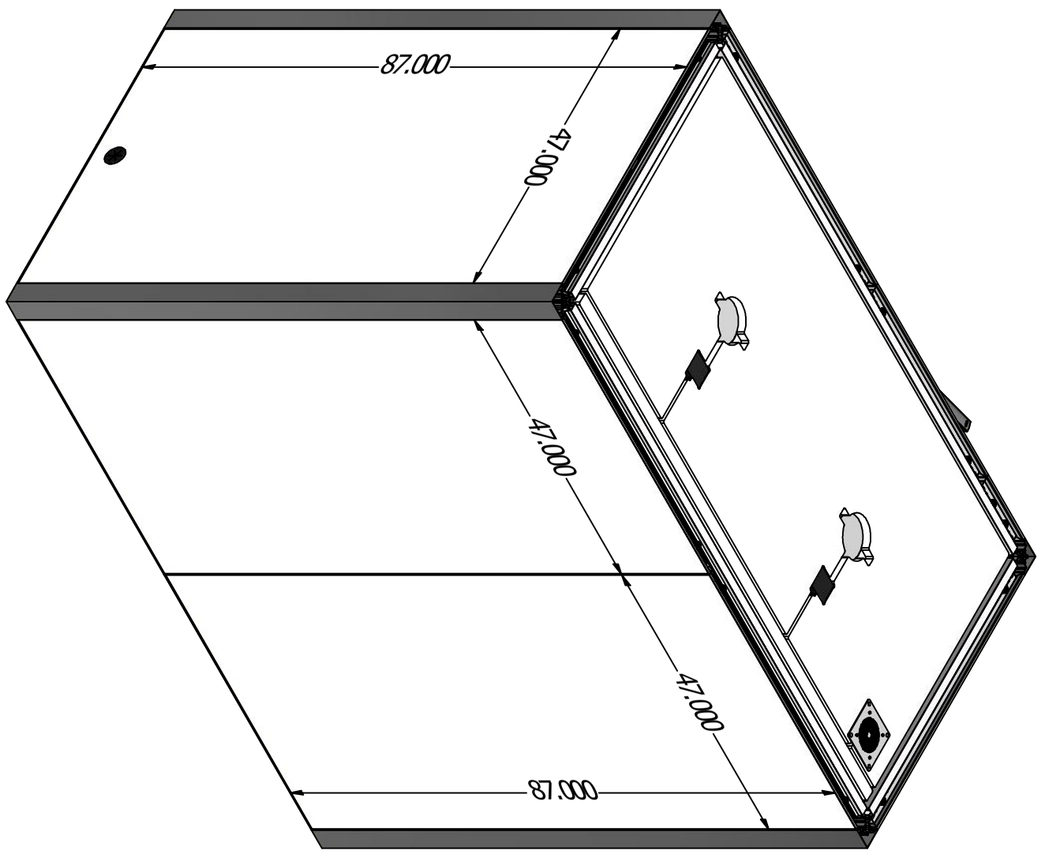

Highmark TechSystems
8343 Clinton Park Drive
Fort Wayne, IN 46825
Phone:260-483-0012

Sheet:	2 of 4
Current Rev:	
Drawn Date:	9/15/2020
Drawn By:	J Christman
Item Number:	WFH_S4_8.0x4.0_LD
Description:	WFH - 8.0x4.0 - Left Door
Client Name:	HM
Job Number:	25151
Cost Center:	Purchase

© 2020 All Rights Reserved

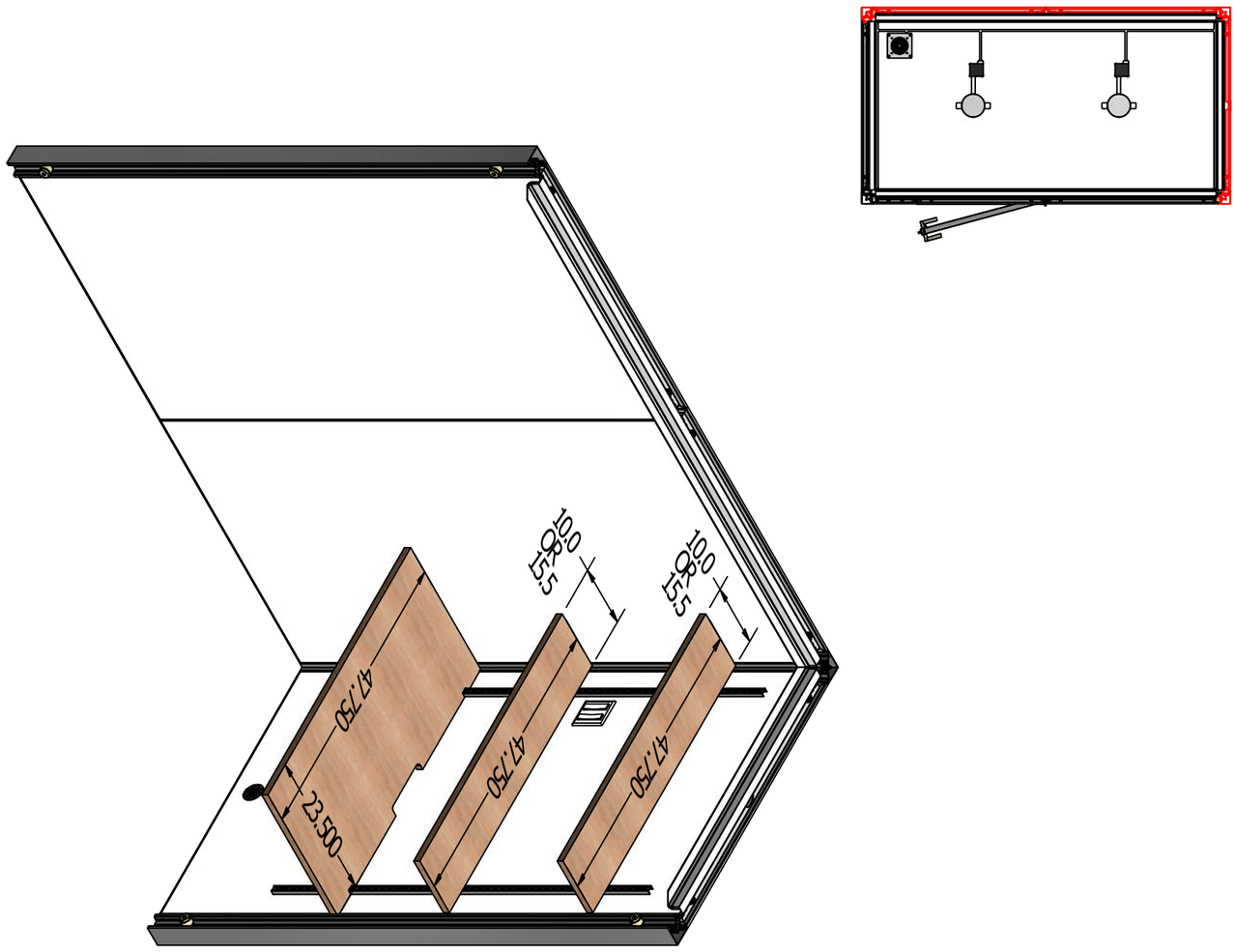

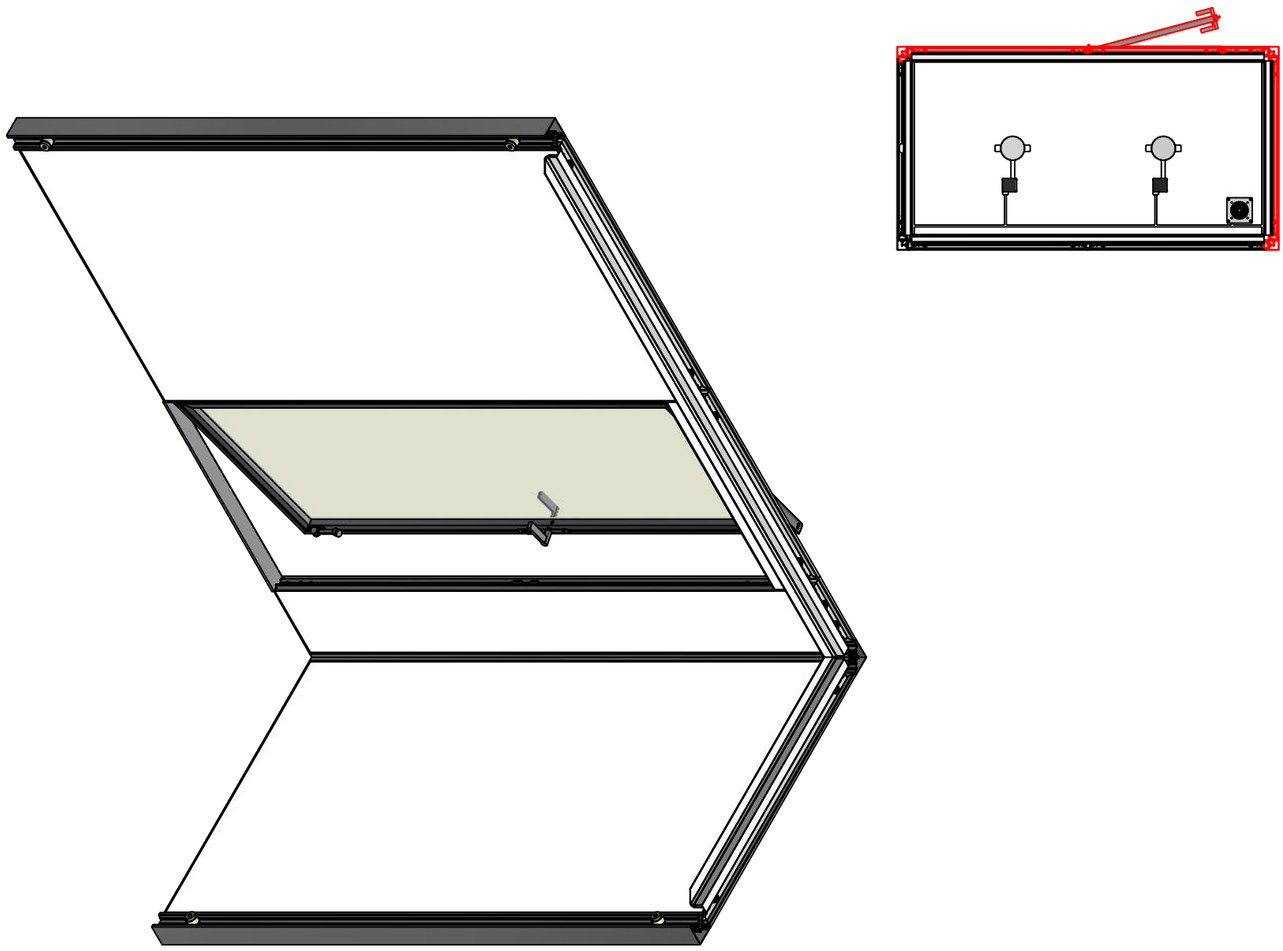

Highmark TechSystems
8343 Clinton Park Drive
Fort Wayne, IN 46825
Phone:260-483-0012

Sheet:	3 of 4
Current Rev:	
Drawn Date:	9/15/2020
Drawn By:	J Christman
Item Number:	WFH_S4_8.0x4.0_LD
Description:	WFH - 8.0x4.0 - Left Door
Client Name:	HM
Job Number:	25151
Cost Center:	Purchase

© 2020 All Rights Reserved

QTY	PART NUMBER	STOCK NUMBER	DESCRIPTION
10	0.250-20 Square Nut		0.250-20 Square Nut
10	0.3125-18 Rectangle Nut		0.3125-18 Rectangle Nut
16	0.3125-18 Square Head Screw		
16	5/16-18 Square Nut		5/16-18 Square Nut
10	6103K820_SWIVEL LEVELING MOUNT WITH THREADED HOLE		STEP AP203
20	6214K350_COMFORT-GRIP KNURLED-RIM KNOB		STEP AP203
10	90218A318_REUSABLE PUSH-IN RIVETS WITH ARROW SHANK		STEP AP203
4	91020A240_PUSH-IN RIVETS WITH CLICK-LOCK SHANK		STEP AP203
14	91465A113_GRADE A STEEL SQUARE HEAD BOLT		STEP AP203
14	93886A150_REINFORCED PLASTIC KNURLED-HEAD THUMB NUT		STEP AP203
10	ANSI B18.3 - 1/4-20 UNC x 1.5		Hexagon Socket Set Screw - Flat Point
20	ANSI B18.3 - 5/16 - 18 UNC - 1/2 HS HCS		Hexagon Socket Head Cap Screw
2	ANSI B18.3 - 5/16 - 18 UNC - 3 1/4 HS HCS		Hexagon Socket Head Cap Screw
4	ANSI B18.3 - 5/16 - 18 UNC - 3 HS HCS		Hexagon Socket Head Cap Screw
58	ANSI B18.3 - 5/16 - 18 UNC - 3/4 HS HCS		Hexagon Socket Head Cap Screw
10	ANSI B18.3 - 5/16-18 UNC x 0.31		Hexagon Socket Set Screw - Flat Point
2	ANSI B18.3 - 5/16-18 UNC x 0.44		Hexagon Socket Set Screw - Cone Point
4	ANSI B18.3 - 5/16-18 UNC x 0.5		Hexagon Socket Set Screw - Cone Point
8	ANSI B18.6.3 - 8-32 x 1 1/2		Countersunk Flat Head Screw
4	ANSI B18.6.4 - 8-32 UNC - 0.625		Cross Recessed Flat Countersunk Head Tapping Screw - Type C - Type I
14	ANSI B18.6.4 - No. 10-16 x 1 1/2		Cross Recessed Flat Countersunk Head Tapping Screw Type AB - Type I
6	ANSI B18.6.4 - No. 6 - 20 - 1		Cross Recessed Oval Countersunk Head Tapping Screw - Type AB - Type I
6	ANSI B18.6.4 - No. 6 - 20 - 2		Cross Recessed Oval Countersunk Head Tapping Screw - Type AB - Type I
2	ANSI B18.6.4 - No. 6 - 20 - 3		Cross Recessed Oval Countersunk Head Tapping Screw - Type AB - Type I
2	Ceiling Converter Box		
1	Ceiling Fan Lower		
1	Ceiling Fan Retainer		
2	Ceiling Light		
1	Door Lock Block		
1	DoorFootLeg		
1	DoorFootMount		
1	Light Switches		
20	Locator		
20	Locator Threaded Rod		
2	Maxwall-Sit:A		Maxwall-Sit - 93.000 in
2	Maxwall-Sit:B		Maxwall-Sit - 46.000 in
24	QC - #8 - 0.5		Square Recessed Flat Countersunk Head Wood Screw
4	SS Shelf Bracket for 10		
2	SS Shelf Bracket for Desk		
2	Shelf Standard		
2	Short Wall Block		
4	Sound Insulation:B		
1	Sound Insulation:E		
2	VHB Tape:SP0001		VHB Tape - 78.250 in
2	VHB Tape:SP0002		VHB Tape - 30.688 in
1	Vinyl Velcro Cover:B		Vinyl Cover
1	WFH Threshold		Maxdoor Threshold - 36.838
2	Wall Grommet		
1	Wall Plate		
1	fan		
1	runko		
24	0.750 in Velcro Loop:SP0001	100-40	0.750 in Velcro Loop - 85.017 in
20	0.750 in Velcro Loop:SP0002	100-40	0.750 in Velcro Loop - 43.017 in
4	0.750 in Velcro Loop:SP0003	100-40	0.750 in Velcro Loop - 31.267 in
4	0.750 in Velcro Loop:SP0005	100-40	0.750 in Velcro Loop - 7.767 in
4	0.750 in Velcro Loop:SP0006	100-40	0.750 in Velcro Loop - 4.017 in
24	0.750 in Velcro Hook:SP0001	100-50	0.750 in Velcro Hook - 85.017 in
20	0.750 in Velcro Hook:SP0002	100-50	0.750 in Velcro Hook - 43.017 in
4	0.750 in Velcro Hook:SP0003	100-50	0.750 in Velcro Hook - 31.267 in
4	0.750 in Velcro Hook:SP0004	100-50	0.750 in Velcro Hook - 7.767 in
4	0.750 in Velcro Hook:SP0005	100-50	0.750 in Velcro Hook - 4.017 in
4	Maxwall 90 Degree Extrusion:SP0001	10A20198194AN	Maxwall 90 Degree Extrusion - 87.000 in
1	Maxdoor Jamb - Lockside:SP0001	10A21824166AN	Maxdoor Jamb - Lockside - 80.500 in
1	Door Frame - Lockside:SP0001	10A21825166AN	Door Frame - Lockside - 80.000 in
2	Door Frame:SP0001	10A21825166AN	Door Frame - 34.438 in
1	Maxdoor Jamb Hinge:SP0001	10A21826166AN	Maxdoor Jamb Hinge - 80.500 in
1	Door Frame - Hinge Side:SP0001	10A21827166AN	Door Frame - Hinge Side - 80.000 in
6	Maxwall Frame Member:SP0001	10A21829242AN	Maxwall Frame Member - 87.000 in
6	Maxwall Frame Member:SP0002	10A21829242AN	Maxwall Frame Member - 87.000 in
8	Maxwall Frame Member:SP0003	10A21829242AN	Maxwall Frame Member - 47.000 in
2	Maxwall Frame Member:SP0004	10A21829242AN	Maxwall Frame Member - 47.000 in
2	Maxwall Frame Member:SP0005	10A21829242AN	Maxwall Frame Member - 35.250 in
2	Maxwall Frame Member:SP0006	10A21829242AN	Maxwall Frame Member - 11.750 in
2	Maxwall Frame Member:SP0007	10A21829242AN	Maxwall Frame Member - 6.000 in
8	Maxwall Infill:SP0001	20 - WFH_Melamine_Brite White	20 - WFH_Melamine_Brite White @ 86.750 in x 46.750 in
1	Maxwall Infill:SP0002	20 - WFH_Melamine_Brite White	20 - WFH_Melamine_Brite White @ 86.750 in x 46.750 in
1	Maxwall Infill:SP0003	20 - WFH_Melamine_Brite White	20 - WFH_Melamine_Brite White @ 86.750 in x 46.750 in
2	Maxwall Infill:SP0004	20 - WFH_Melamine_Brite White	20 - WFH_Melamine_Brite White @ 86.750 in x 11.500 in
2	Maxwall Infill:SP0005	20 - WFH_Melamine_Brite White	20 - WFH_Melamine_Brite White @ 5.750 in x 35.000 in
1	Ceiling Panel:A	20-455	20-455 @ 92.750 in x 45.500 in
24	50-150	50-150	Inside Corner Angle
2	Hinge Pin:SP0001	50-180	Hinge Pin - 39.938 in
52	50-40	50-40	Outside Corner Angle - Steel (circle and square)
8	50-420	50-420	Monitor Support Bracket
1	Maxwall Monitor Mount:SP0001	80-115	80-115 @ 42.000 in x 63.000 in
1	Maxwall Monitor Mount:SP0002	80-115	80-115 @ 6.750 in x 63.000 in
1	Desk:SP0001	80-185	80-185 @ 47.750 in x 23.500 in
2	Shelf:A	80-185	80-185 @ 47.750 in x 10.000 in
1	Maxslab Infill:SP0001	CUSTOM [Acrylic - Clear]	CUSTOM [Acrylic - Clear] @ 79.719 in x 34.156 in
2	Nylon Washer	Nylon Washer	Nylon Washer for Door Slab

Item Number: WFH_S4_8.0x4.0_LD

Description: WFH - 8.0x4.0 - Left Door

Cost Center: Purchase

Client Name: HM

Job Number: 25151

© 2020 All Rights Reserved

Sheet: 4 of 4

Current Rev:

Drawn Date: 9/15/2020

Drawn By: J Christman

Highmark TechSystems
8343 Clinton Park Drive
Fort Wayne, IN 46825
Phone:260-483-0012